PART NO. 6605xxWF051

DWG NO. C6605WF

Dimensional & Ordering Information:

Part No.	Circuits	Dim A	Dim B	Dim C	Dim D
660502WF051	2	6.35	--	7.62	13.97
660503WF051	3	12.70	--	7.62	20.32
660504WF051	4	19.05	--	7.62	26.67
660505WF051	5	25.04	--	7.62	33.02
6605A6WF051	6	6.35	12.7	20.32	13.97
660509WF051	9	12.70	12.7	20.32	20.32
660512WF051	12	19.05	12.7	20.32	26.67
660515WF051	15	25.4	12.7	20.32	33.02

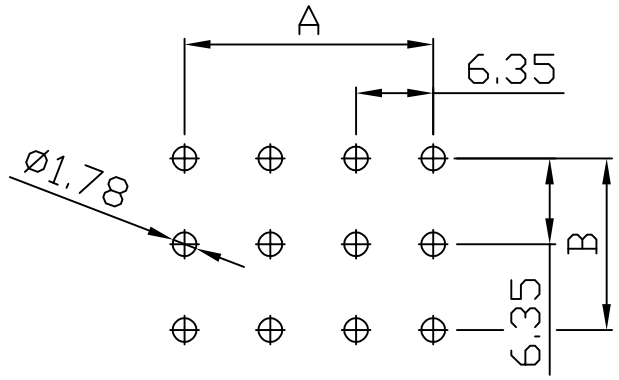

RECOMMENDED PCB LAYOUT

(PCB THK=1.0~1.6)

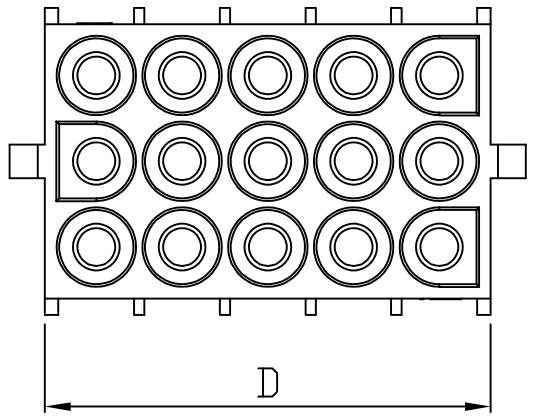

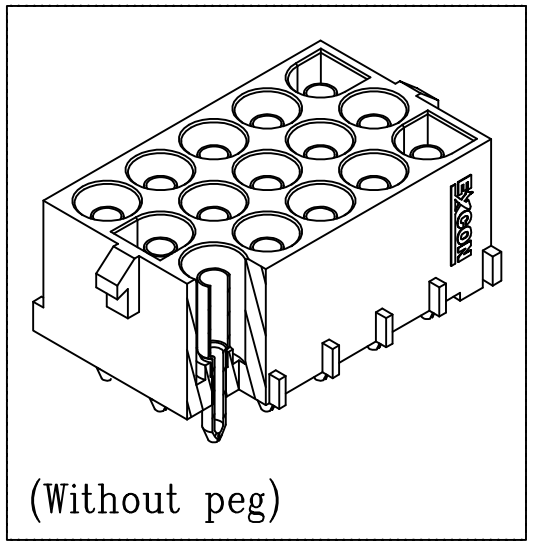

(Without peg)

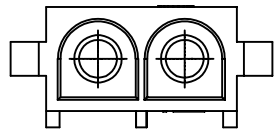

660502WF051

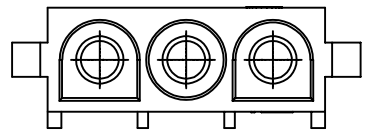

660503WF051

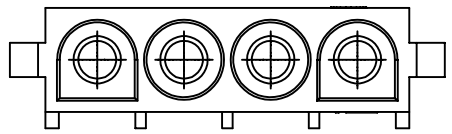

660504WF051

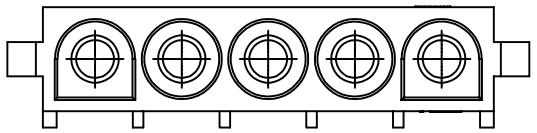

660505WF051

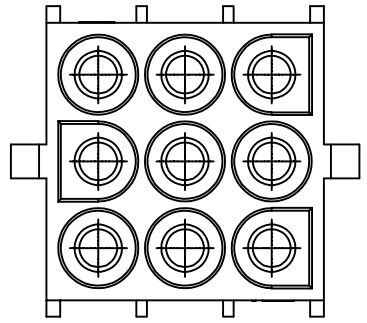

660509WF051

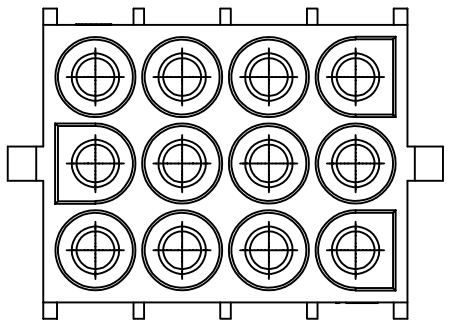

660512WF051

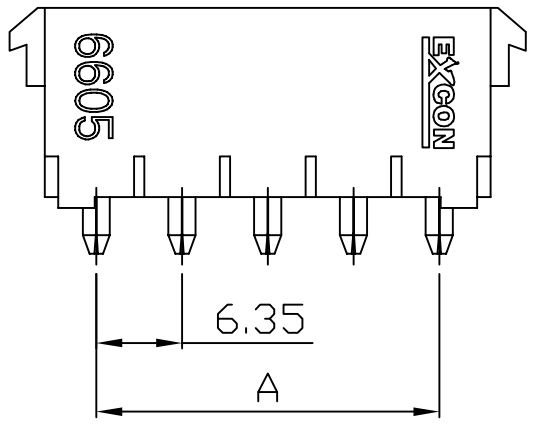

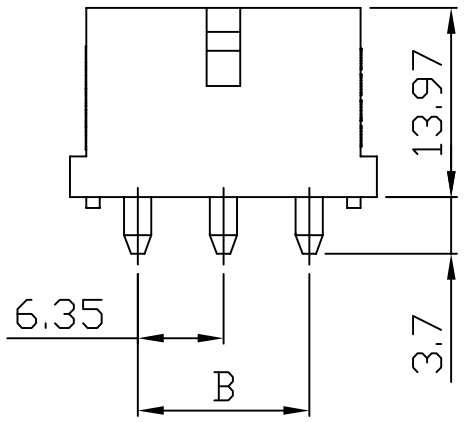

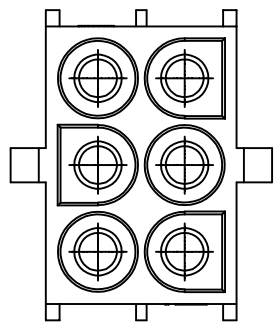

660506WF051

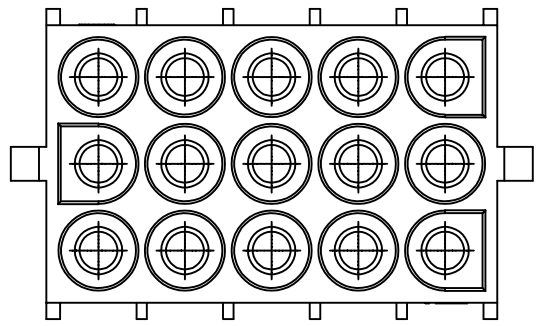

660515WF051

NOTE:

1. Housing Material: Nylon 66 UL94V2
2. Color: Natural
3. Withstand voltage: 5000V AC/minute.
4. Current rating: 5A AC/DC.
5. Voltage rating: 600V AC/DC

REV.	REVISIONI	DIS	DATE

UNLESS OTYERWISE SPECIFIED TOLERANCES
3 PLACE ±0.5 ±0.10
2 PLACE ±1.5 ±0.25
1 PLACE ±2.0 ±0.50
ANGLE DIM

EXCON TECHNOLOGY COMPANY

SCALE	REV.	PAGE:	UNIT mm	DWG NO:	PART.NO
NONE	B	1/1	TYIRD ANGLE PROJECTION	C6605WF	6605xxWF051