PART NO. 880300TA351

DWG NO. C8803TA

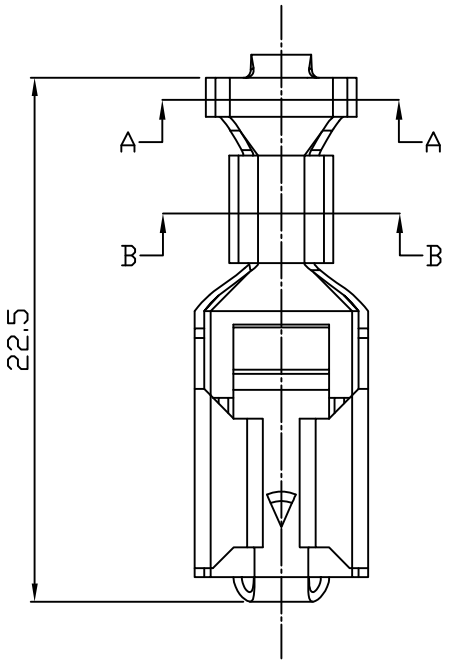

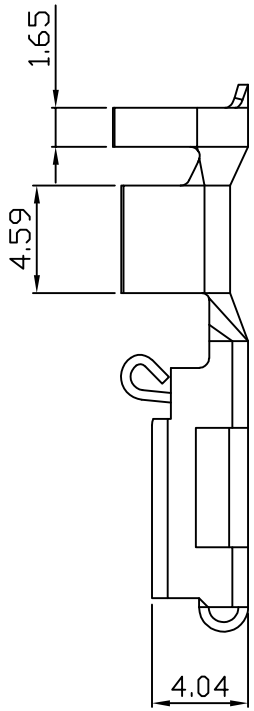

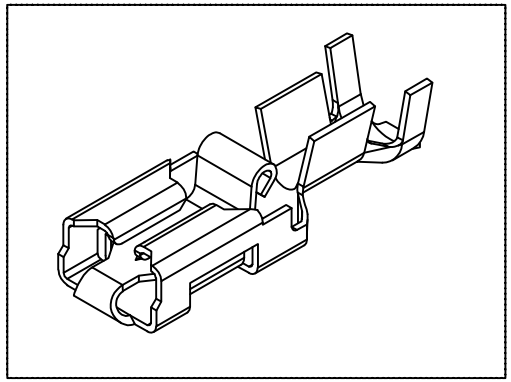

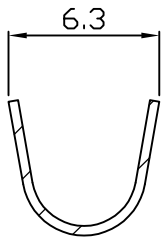

SEC A–A

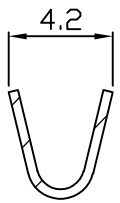

SEC B–B

NOTE:

1. Terminal Material: phosphor bronze.
2. Plated: Tin–plated 50u"min.
3. Applicable wires: AWG#26–#16
4. Insulation O.D.:1.2–3.2 mm
5. Q'ty / reel:10,000 PCS

REV.	REVISIONI	DIS	DATE

UNLESS OTHERWISE SPECIFIED TOLERANCES
3 PLACE ±0.5 ±0.10
2 PLACE ±1.5 ±0.35
1 PLACE ±2.0 ±0.50
ANGLE DIM

EXCON

EXCON TECHNOLOGY COMPANY

SCALE	REV.	PAGE:	UNIT mm	DWG NO:	PART.NO
8/1	A	1	THIRD ANGLE PROJECTION	C8803TA	880300TA351