PART NO. 5001xxWR001

DWG NO. C5001WR

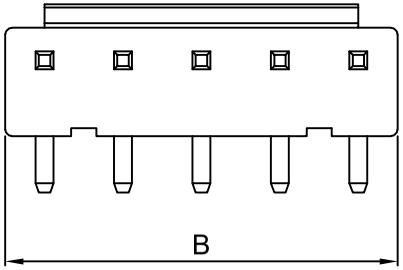

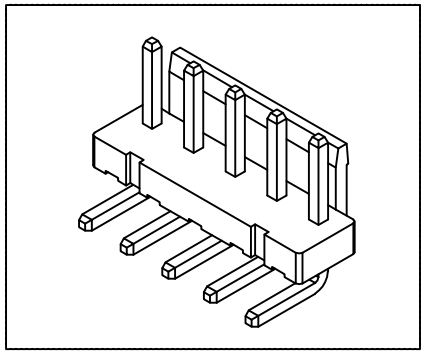

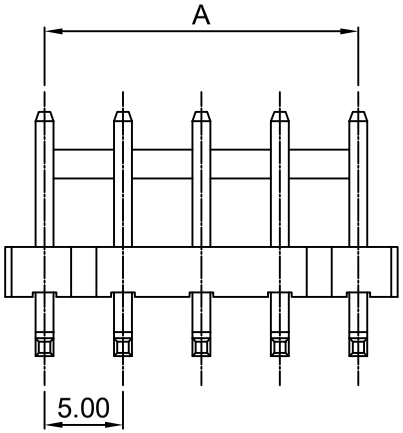

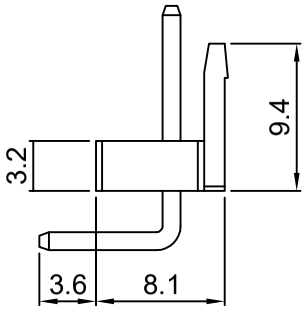

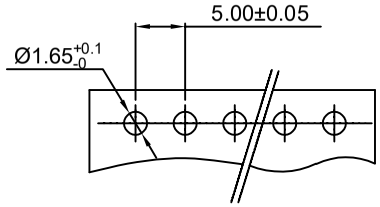

RECOMMENDED PCB LAYOUT

(PCB THK=1.0~1.6)

Dimensional & Ordering Information:

Part No.	Circuits	Dim A	Dim B
500102WR001	2	5.00	10.00
500103WR001	3	10.00	15.00
500104WR001	4	15.00	20.00
500105WR001	5	20.00	25.00
500106WR001	6	25.00	30.00

NOTE:

1. Wafer Material: Nylon 66 UL94V-0
   Pin/Pos Material: brass bronze.
2. Plated: Tin-plated 50u"min.
3. Insulation resistance: 1000M ohm/min.
4. Withstand voltage: 1500V AC/minute.
5. Current retang: 10A AC/DC.
6. Voltage rating: 250V AC/DC

REV.	REVISIONI	DIS	DATE

UNLESS OTHERWISE SPECIFIED TOLERANCES
3 PLACE ±0.5 ±0.10
2 PLACE ±1.5 ±0.25
1 PLACE ±2.0 ±0.50
ANGLE DIM

EXCON TECHNOLOGY COMPANY

SCALE	REV.	PAGE:	UNIT mm	DWG NO:	PART.NO
2/1	A	1	THIRD ANGLE PROJECTION	C5001WR	5001xxWR001