PART NO. 420200TYxxx

DWG NO. C4202TY

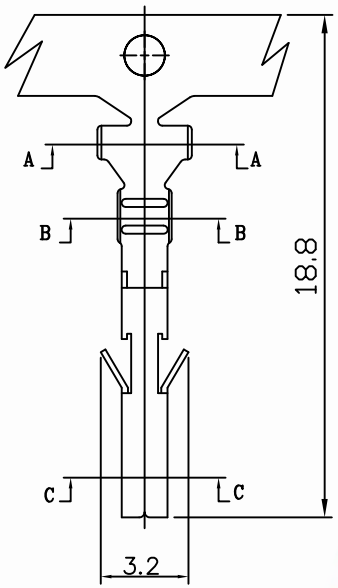

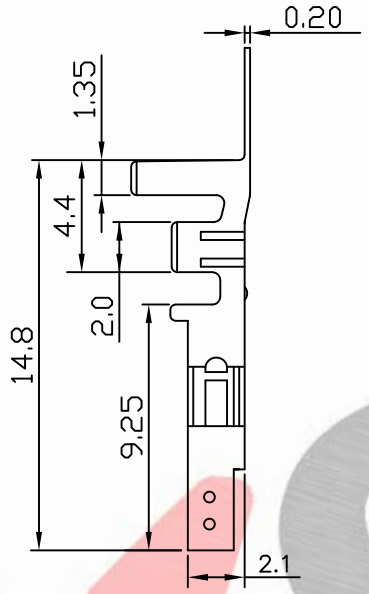

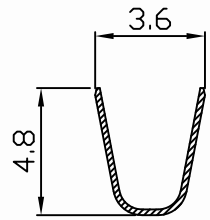

SEC A–A

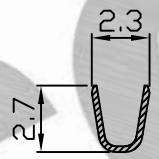

SEC B–B

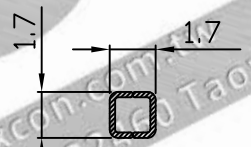

SEC C–C

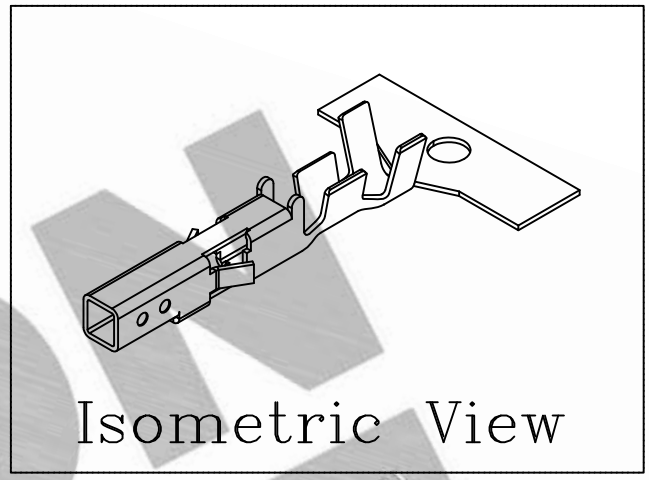

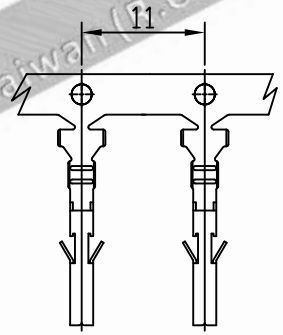

NOTE:

1. Terminal Material: Brass bronze or Phosphor bronze
2. Plated: Tin pre-plated 50u"min.
3. Current rating: 5A AC/DC
4. Voltage rating: 600V AC/DC
5. Withstand voltage: 1500V AC/minute
6. Insulation resistance:1000MΩ min
7. Insulation O.D.: 1.7~2.8mm
8. Q'ty / reel: 4,000pcs

No.	Part No.	Wire Range	Material	Finishing
1	420200TY051	AWG#16~#20	Brass	Tin pre-plated
2	420200TY351	AWG#16~#20	Phosphor	Tin pre-plated

REV.	REVISIONI	DIS	DATE
C	DWG RELEASE	Christy	1/7 2016

UNLESS OTHERWISE SPECIFIED TOLERANCES
3 PLACE ±0.5 ±0.10
2 PLACE ±1.5 ±0.25
1 PLACE ±2.0 ±0.50
ANGLE DIM

EXCON TECHNOLOGY COMPANY

SCALE	REV.	PAGE:	UNIT mm	DWG NO:	PART.NO
4/1	C	1/1	THIRD ANGLE PROJECTION	C4202TY	420200TYxxx

EXCON
www.excon.com.tw
89, Xing Long Road, Ping Zhen Dist., 32449 Taoyuan City, Taiwan (R.O.C)