PART NO. 2545xxWR003

DWR NO. C2545WR

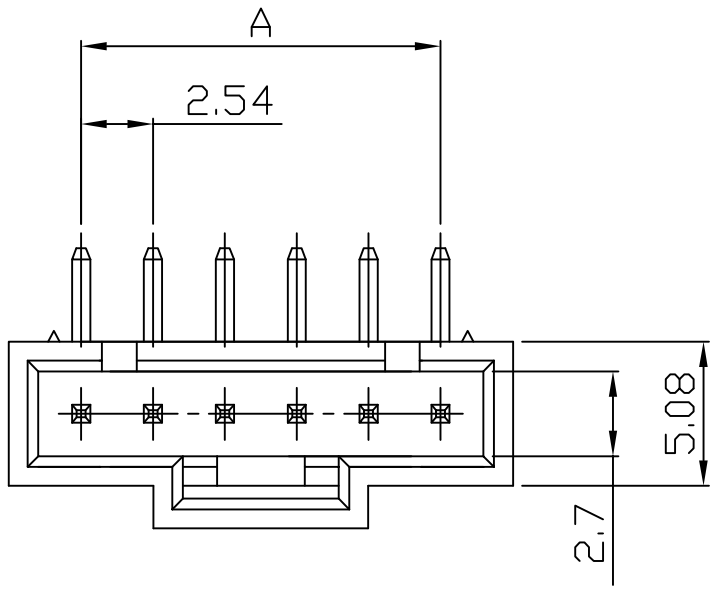

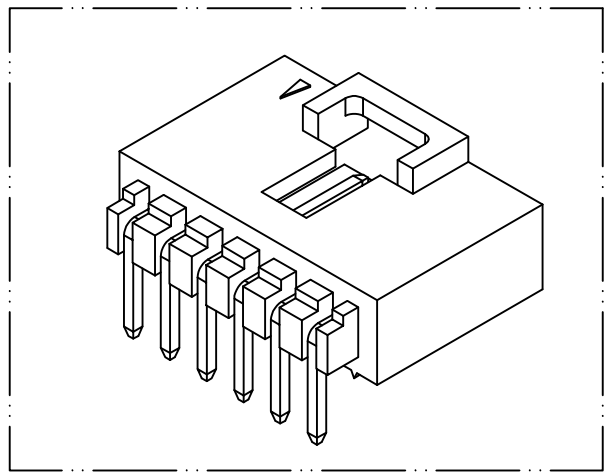

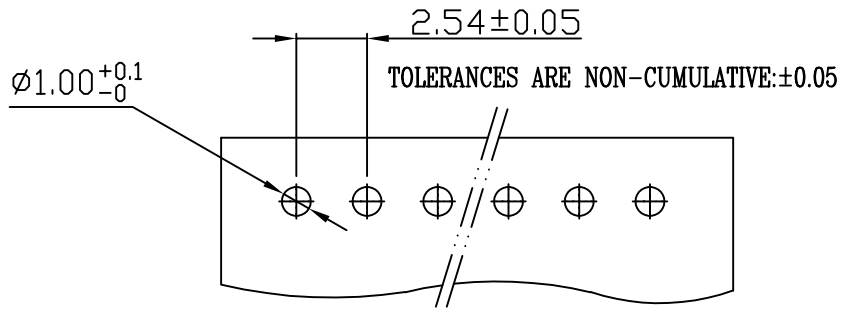

RECOMMENDED PCB LAYOUT
(PCB THK=1.0~1.6)

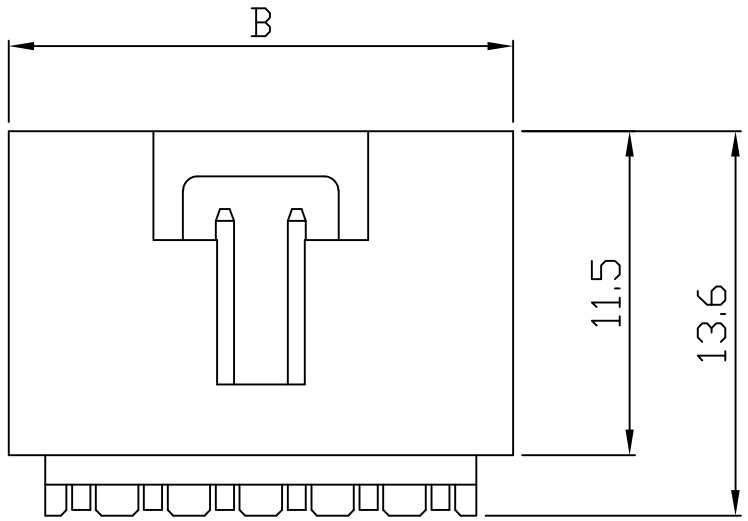

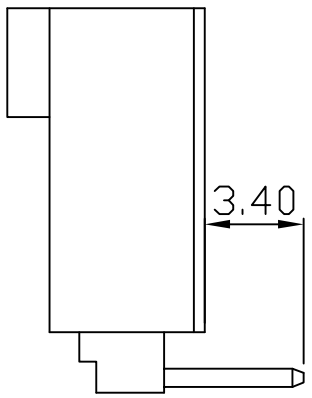

Dimensional & Ordering Information:

Part No.	Circuits	Dim A	Dim B
254502WR003	2	2.54	7.62
254503WR003	3	5.08	10.16
254504WR003	4	7.62	12.70
254505WR003	5	10.16	15.24
254506WR003	6	12.70	17.78
254507WR003	7	15.24	20.32
254508WR003	8	17.78	22.86
254509WR003	9	20.32	25.40
254510WR003	10	22.86	27.94
254511WR003	11	25.40	30.48
254512WR003	12	27.94	33.02

NOTE:

1. Wafer Material: Nylon-66 UL94V-0
   Pin/Pos Material: brass bronze.
2. Plated: Gold flash
3. Insulation resistance: 1000MΩ min.
4. Withstand voltage: 1000V AC/minute.
5. Current retang: 3A AC/DC.
6. Voltage rating: 250V AC/DC

REV.	REVISIONI	DIS	DATE

UNLESS OTHERWISE SPECIFIED TOLERANCES
3 PLACE ±0.5 ±0.10
2 PLACE ±1.5 ±0.25
1 PLACE ±2.0 ±0.50
ANGLE DIM

EXCON

EXCON TECHNOLOGY COMPANY

SCALE	REV.	PAGE:	UNIT mm	DWG NO:	PART.NO
3/1	A	1	THIRD ANGLE PROJECTION	C2545WR	2545xxWR003