PART NO. 254500TC351

DWR NO. C2545TC

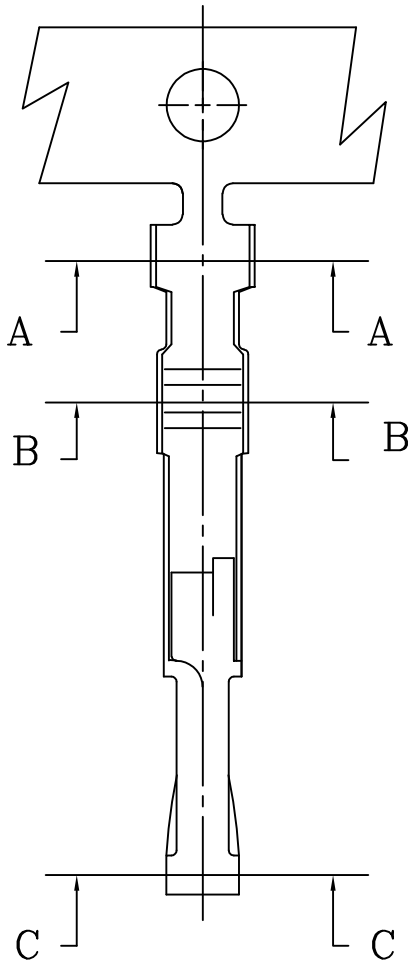


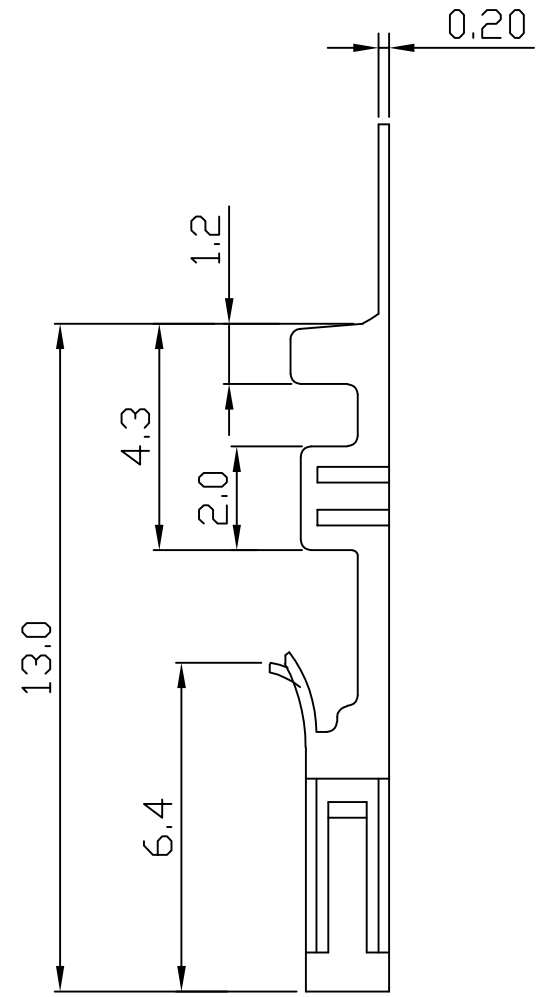


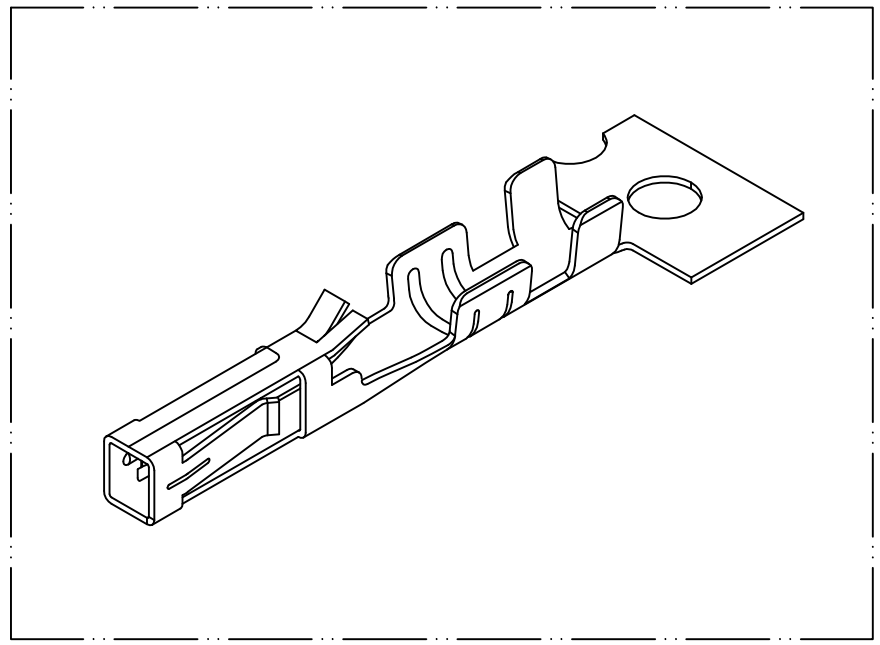

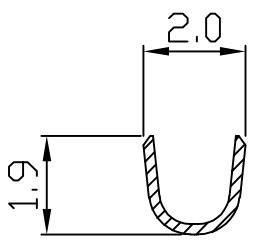


SEC A-A

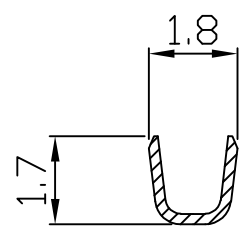


SEC B-B

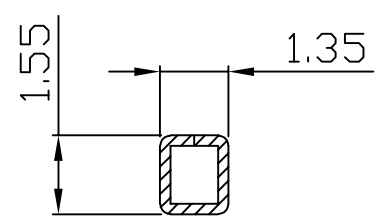


SEC C-C

NOTE:

1. Terminal Material: phosphor bronze
2. Plated: Tin pre-plated 50u"min.
3. Applicable wires: AWG#28~#24
4. Insulation O.D.: 1.2~1.7mm
5. Q'ty / reel: 15,000 PCS

| REV. | REVISIONI | DIS | DATE |
|---|---|---|---|
| | | | |
| | | | |
| | | | |

UNLESS OTHERWISE SPECIFIED TOLERANCES
3 PLACE ±0.5 ±0.10
2 PLACE ±1.5 ±0.25
1 PLACE ±2.0 ±0.50
ANGLE DIM

EXCON

EXCON TECHNOLOGY COMPANY

| SCALE | REV. | PAGE: | UNIT mm | DWG NO: | PART.NO |
|---|---|---|---|---|---|
| 3/1 | A | 1 | THIRD ANGLE PROJECTION | C2545TC | 254500TC351 |