PART NO. 2510xxHA001

DWG NO. C2510HA

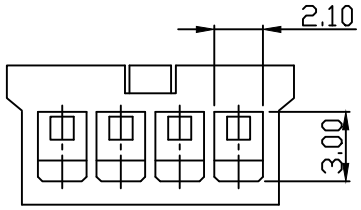

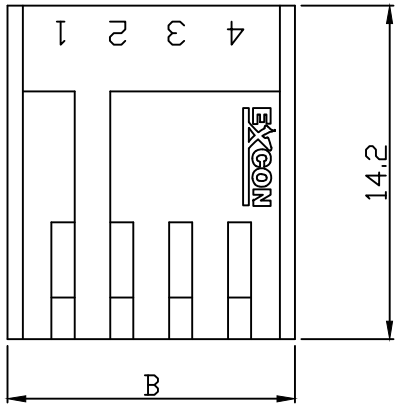

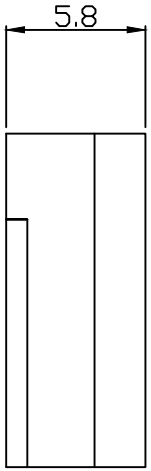

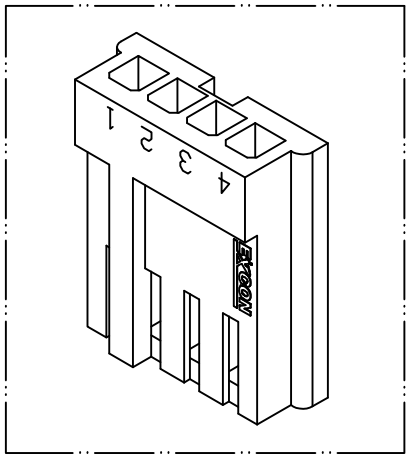

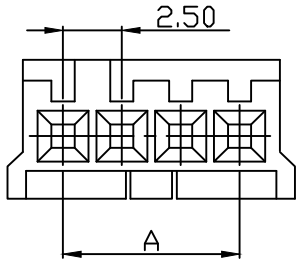

NOTE:

1. Housing Material: Nylon 66 UL94V0
2. Color: Natural
3. Withstand voltage: 1000V AC/minute.
4. Current rating: 3A AC/DC.
5. Voltage rating: 250V AC/DC

Dimensional & Ordering Information:

Part No.	Circuits	Dim A	Dim B
251002HA001	2	2.50	7.25
251003HA001	3	5.00	9.75
251004HA001	4	7.50	12.25
251005HA001	5	10.00	14.75
251006HA001	6	12.50	17.25
251007HA001	7	15.00	19.75
251008HA001	8	17.50	22.25
251009HA001	9	20.00	24.75
251010HA001	10	22.50	27.25
251011HA001	11	25.00	29.75
251012HA001	12	27.50	32.25

REV.	REVISIONI	DIS	DATE

UNLESS OTHERWISE SPECIFIED TOLERANCES
3 PLACE ±0.5 ±0.10
2 PLACE ±1.5 ±0.25
1 PLACE ±2.0 ±0.50
ANGLE DIM

EXCON

EXCON TECHNOLOGY COMPANY

SCALE	REV.	PAGE:	UNIT mm	DWG NO:	PART.NO
4/1	A	1	THIRD ANGLE PROJECTION	C2510HA	2510xxHA001