PART NO. 2005xxWR203

DWG NO. C2005WR

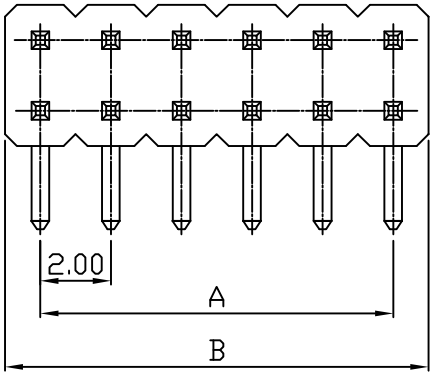

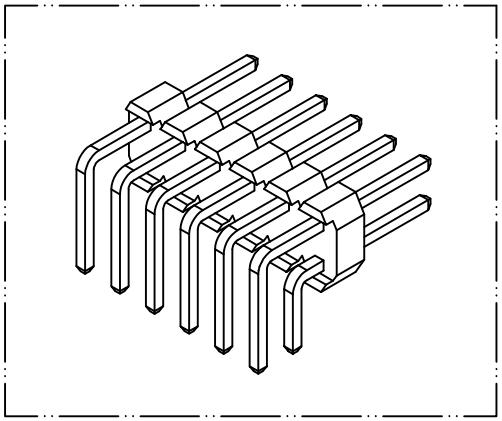

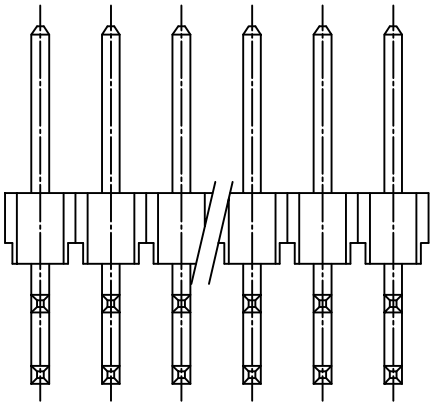

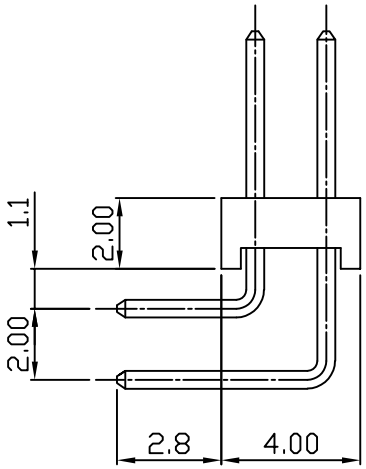

Dimensional & Ordering Information:

Part No.	Circuits	Dim A	Dim B
200504WR203	4	2.00	4.00
200506WR203	6	4.00	6.00
200508WR203	8	6.00	8.00
200510WR203	10	8.00	10.00
200512WR203	12	10.00	12.00
200514WR203	14	12.00	14.00
200516WR203	16	14.00	16.00
200518WR203	18	16.00	18.00
200520WR203	20	18.00	20.00
200522WR203	22	20.00	22.00
200524WR203	24	22.00	24.00
200526WR203	26	24.00	26.00
200528WR203	28	26.00	28.00
200530WR203	30	28.00	30.00
200532WR203	32	30.00	32.00
200534WR203	34	32.00	34.00
200536WR203	36	34.00	36.00
200538WR203	38	36.00	38.00
200540WR203	40	38.00	40.00

NOTE:

1. Wafer Material: PBT.UL 94V0
   Pin/Pos Material: brass bronze.
2. Plated: Gold flash
3. Current rating: 2.5A AC/DC
4. Voltage rating: 200V AC/DC
5. Withstand voltage: 1000V AC/minute

REV.	REVISIONI	DIS	DATE

UNLESS OTHERWISE SPECIFIED TOLERANCES
3 PLACE ±0.5 ±0.10
2 PLACE ±1.5 ±0.25
1 PLACE ±2.0 ±0.50
ANGLE DIM

EXCON

EXCON TECHNOLOGY COMPANY

SCALE	REV.	PAGE:	UNIT mm	DWG NO:	PART.NO
NONE	B	1	THIRD ANGLE PROJECTION	C2005WR	2005xxWR203