PART NO. 2004xxWV203

DWG NO. C2004WV

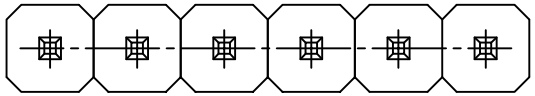

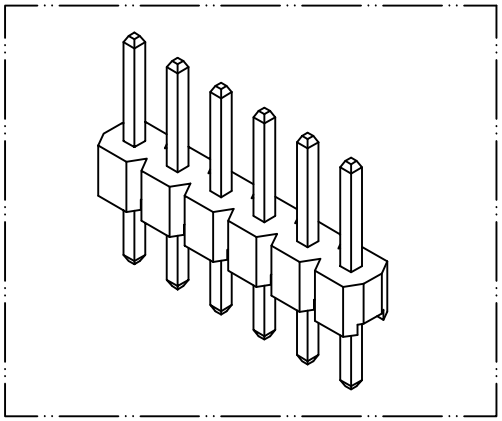

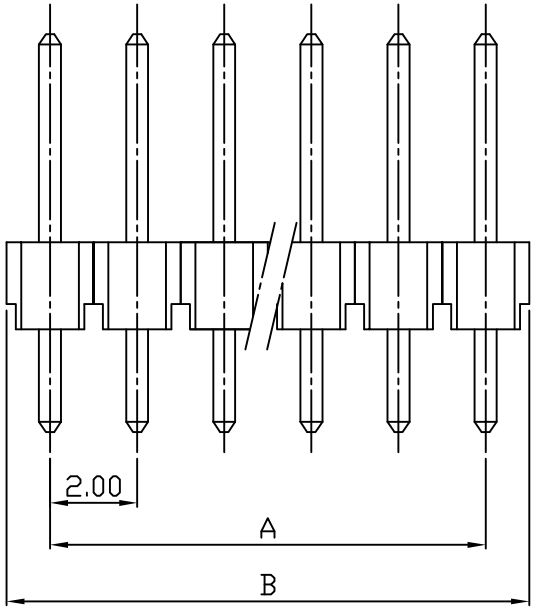

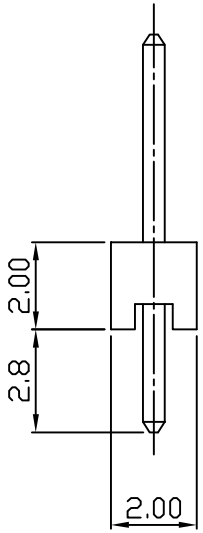

Dimensional & Ordering Information:

Part No.	Circuits	Dim A	Dim B
200401WV203	1	--	2.00
200402WV203	2	2.00	4.00
200403WV203	3	4.00	6.00
200404WV203	4	6.00	8.00
200405WV203	5	8.00	10.00
200406WV203	6	10.00	12.00
200407WV203	7	12.00	14.00
200408WV203	8	14.00	16.00
200409WV203	9	16.00	18.00
200410WV203	10	18.00	20.00
200411WV203	11	20.00	22.00
200412WV203	12	22.00	24.00
200413WV203	13	24.00	26.00
200414WV203	14	26.00	28.00
200415WV203	15	28.00	30.00
200416WV203	16	30.00	32.00
200417WV203	17	32.00	34.00
200418WV203	18	34.00	36.00
200419WV203	19	36.00	38.00
200420WV203	20	38.00	40.00

NOTE:

1. Wafer Material: PBT.UL 94V0
   Pin/Pos Material: brass bronze.
2. Plated: Gold flash
3. Current rating: 2.5A AC/DC
4. Voltage rating: 200V AC/DC
5. Withstand voltage: 1000V AC/minute

REV.	REVISIONI	DIS	DATE

UNLESS OTHERWISE SPECIFIED TOLERANCES
3 PLACE ±0.5 ±0.10
2 PLACE ±1.5 ±0.25
1 PLACE ±2.0 ±0.50
ANGLE DIM

EXCON

EXCON TECHNOLOGY COMPANY

SCALE	REV.	PAGE:	UNIT mm	DWG NO:	PART.NO
NONE	B	1	THIRD ANGLE PROJECTION	C2004WV	2004xxWV203