PART NO. 2004xxWR203

DWG NO. C2004WR

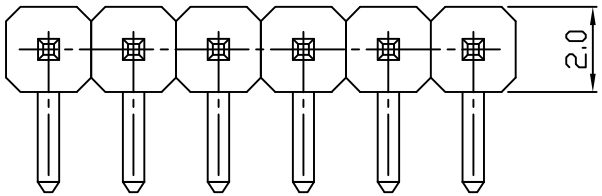

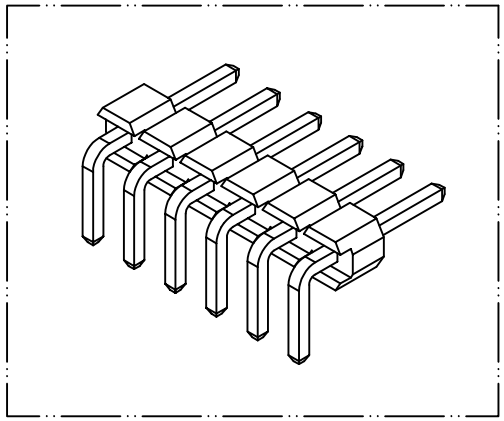

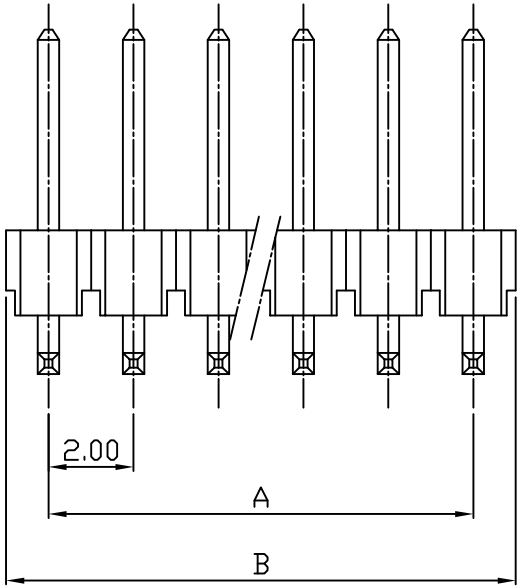

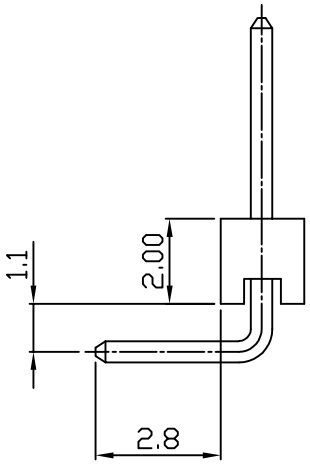

Dimensional & Ordering Information:

Part No.	Circuits	Dim A	Dim B
200401WR203	1	--	2.00
200402WR203	2	2.00	4.00
200403WR203	3	4.00	6.00
200404WR203	4	6.00	8.00
200405WR203	5	8.00	10.00
200406WR203	6	10.00	12.00
200407WR203	7	12.00	14.00
200408WR203	8	14.00	16.00
200409WR203	9	16.00	18.00
200410WR203	10	18.00	20.00
200411WR203	11	20.00	22.00
200412WR203	12	22.00	24.00
200413WR203	13	24.00	26.00
200414WR203	14	26.00	28.00
200415WR203	15	28.00	30.00
200416WR203	16	30.00	32.00
200417WR203	17	32.00	34.00
200418WR203	18	34.00	36.00
200419WR203	19	36.00	38.00
200420WR203	20	38.00	40.00

NOTE:

1. Wafer Material: PBT.UL 94V0
   Pin/Pos Material: brass bronze.
2. Plated: Gold flash
3. Current rating: 2.5A AC/DC
4. Voltage rating: 200V AC/DC
5. Withstand voltage: 1000V AC/minute

REV.	REVISIONI	DIS	DATE

UNLESS OTHERWISE SPECIFIED TOLERANCES
3 PLACE ±0.5 ±0.10
2 PLACE ±1.5 ±0.25
1 PLACE ±2.0 ±0.50
ANGLE DIM

EXCON TECHNOLOGY COMPANY

SCALE	REV.	PAGE:	UNIT mm	DWG NO:	PART.NO
NONE	B	1	THIRD ANGLE PROJECTION	C2004WR	2004xxWR203