PART NO. 2004xxHK201

DWG NO. C2004HK

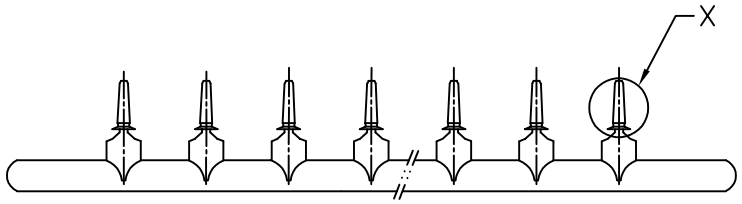

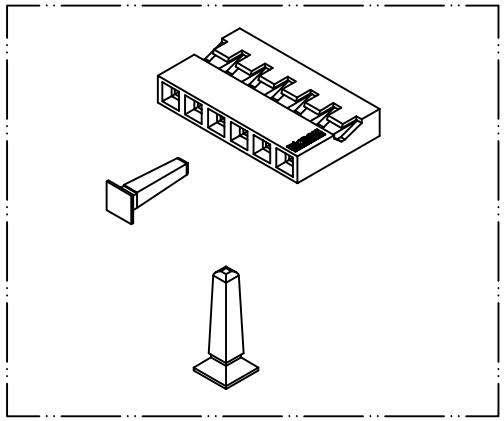

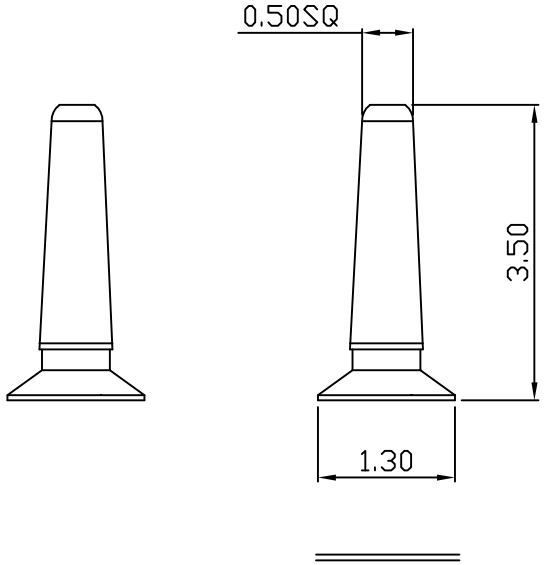

Ordering Information:

Part No.	Color
200400HK201	White
200400HK203	Black

NOTE:

1. Wafer Material: PBT.UL 94V0
2. Color: Black,White
3. Use Material: 4806

REV.	REVISIONI	DIS	DATE

UNLESS OTHERWISE SPECIFIED TOLERANCES
3 PLACE ±0.5 ±0.10
2 PLACE ±1.5 ±0.25
1 PLACE ±2.0 ±0.50
ANGLE DIM

EXCON

EXCON TECHNOLOGY COMPANY

SCALE	REV.	PAGE:	UNIT mm	DWG NO:	PART.NO
NONE	B	1	THIRD ANGLE PROJECTION	C2004HK	2004xxHK201