PART NO. 2004xxHA003

DWG NO. C2004HA

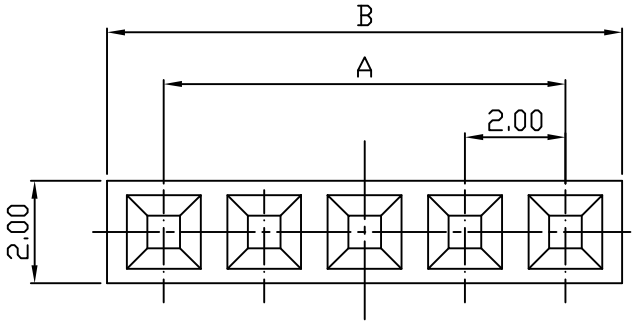

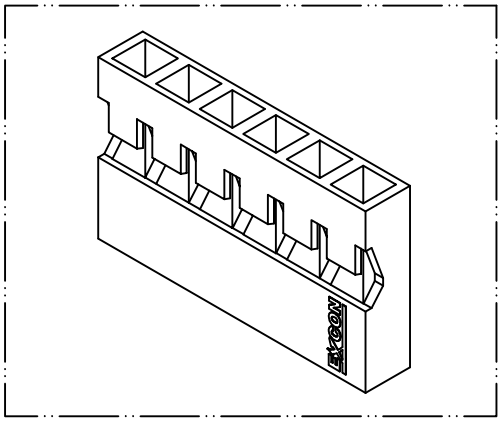

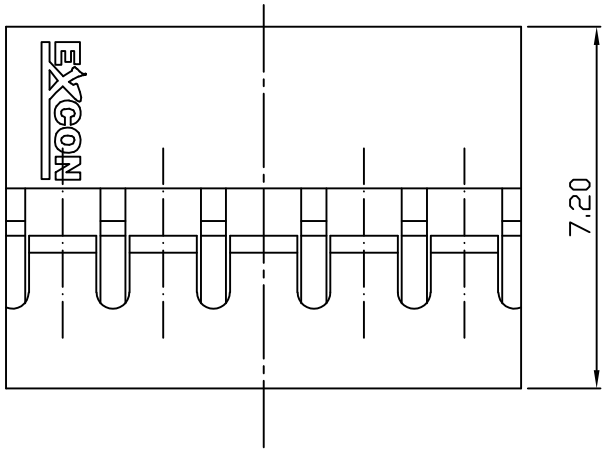

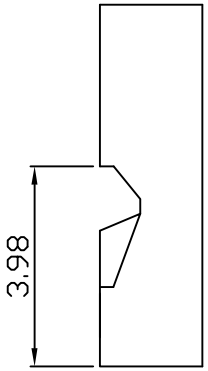

Dimensional & Ordering Information:

Part No.	Circuits	Dim A	Dim B
200401HA003	1	--	2.26
200402HA003	2	2.00	4.26
200403HA003	3	4.00	6.26
200404HA003	4	6.00	8.26
200405HA003	5	8.00	10.26
200406HA003	6	10.00	12.26
200407HA003	7	12.00	14.26
200408HA003	8	14.00	16.26
200409HA003	9	16.00	18.26
200410HA003	10	18.00	20.26
200411HA003	11	20.00	22.26
200412HA003	12	22.00	24.26
200413HA003	13	24.00	26.26
200414HA003	14	26.00	28.26
200415HA003	15	28.00	30.26
200416HA003	16	30.00	32.26
200417HA003	17	32.00	34.26
200418HA003	18	34.00	36.26
200419HA003	19	36.00	38.26
200420HA003	20	38.00	40.26

NOTE:

1. Housing Material: Nylon 66 UL94 V0
2. Color: Black
3. Use Material: CM3004G15
4. Current rating: 2.5A AC/DC
5. Voltage rating: 200V AC/DC
6. Withstand voltage: 1000V AC/minute

REV.	REVISIONI	DIS	DATE

UNLESS OTHERWISE SPECIFIED TOLERANCES
3 PLACE ±0.5 ±0.10
2 PLACE ±1.5 ±0.25
1 PLACE ±2.0 ±0.50
ANGLE DIM

EXCON

EXCON TECHNOLOGY COMPANY

SCALE	REV.	PAGE:	UNIT mm	DWG NO:	PART.NO
NONE	B	1	THIRD ANGLE PROJECTION	C2004HA	2004xxHA003